Data sheet single phase asynchronous motors

LM.17452

Mounting position		
	IM	B35
	IM	2001

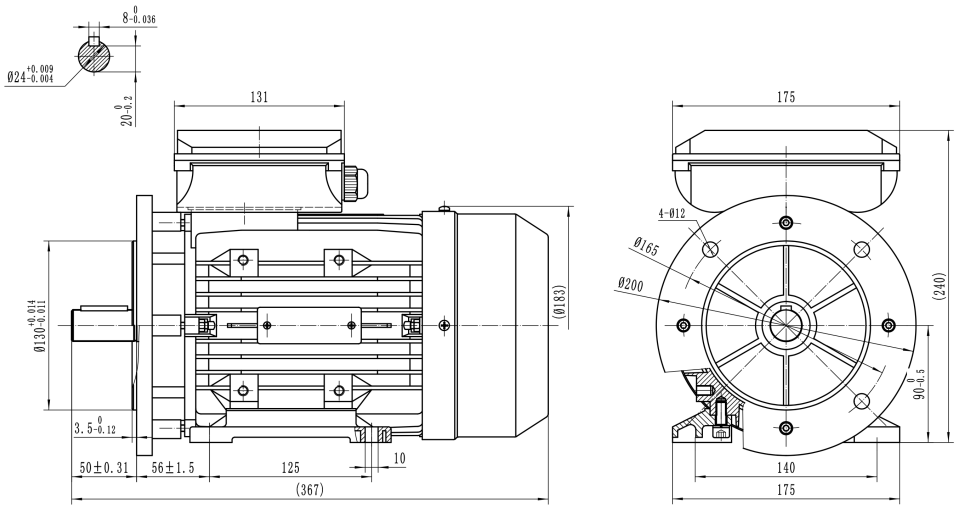

Electrical data			
Rated motor power	1.5		Kw
Rated motor speed	1430		min^{-1} 50Hz
Rated motor frequency	50		Hz
Rated motor voltage(+/-10%)	230		V/50Hz
Start capacitor	200µf/300V		µF/V
Run capacitor	40µf/450V		µF/V
Rated motor torque	10.02		Nm (Mn)
Rated motor current	7.96	V/50Hz	A (In)
Starting motor current	5.6		xIn
Starting motor torque	2.3		xMn
Breakdown motor torque	1.75		xMn
Starting			D.O.L.
Efficiency class	IE1		
Efficiency	50Hz	60Hz	
	82.8	-	100% load
	83.2	-	75% load
	79.1	-	50% load
Power factor cosφ	0.99	-	100% load

General data			
Frame size	90		
Mounting	B35		
Weight	-		Kg
Casing material	Aluminum		
Protection	IP	55	
Insulation class	H		
Tropicalization	Yes		
Vibration class	A		
Duty	S1		
Direction of rotation	CW		
Method of cooling	IC	411	
Cable entry	-		
Standards	IEC/DIN/ISO/VDE/EN		
Execute at Standard	IEC 60034-1		
Feet removable	Yes		
Paintwork	7024	C2 standard	
Thermal protections	n/a		

Site conditions	
Ambient temperature	from -20°C to +40°C
Altitude above sea level	1000 m

Mechanical data						
Noise level	LpA	70	dB(A)	Bearing DE side	6205-2RS-C3	
	LwA	80	dB(A)	Bearing NDE side	6205-2RS-C3	
Moment of inertia	0.00375		Kgm²	Average bearing lifetime	40000	h
Bearings type			NSK	Relubrication interval L1 DE bearing	life	h
Lubricants for bearings	See installation and maintenance manual			Relubrication interval L1 NDE bearing	life	h
				Compensation ring	NDE SIDE	standard

There may be differences between rating plate and calculated values.